T6L2-1

Electric Actuator Size 2 COMPACT

T6L2 with Planetary Gearbox

Screw Type: ACME

Mounting: Female Clevis
Spherical Rod End
Rear Eye

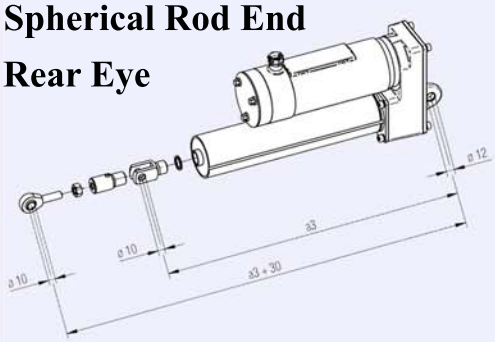

Lubrication: For Life

Protection Rating: IP54

Power Transfer: HTD
Timing Belt

Motor: 460V AC
60 Hz, 3 Phase
Thermal Switch
Optional Brake

Options: Limit Switch
Proximity Switches
Swivel Foot Bracket

Compact Size 2 Selection Chart

ACME Screw

Actuator Type	Nominal Force	Nominal Actuator Speed	Stroke Range min.	Stroke Range max	Run Torque @Nominal Force	Start-up Torque @Nominal Force	Nominal Motor Size	Pol	Motor Current @ Load/460V	Stall Torque
	lbf.	inch/sec.	inch	inch	lb-ft.	lb-ft.	kW	P	A	lb-ft.
T6L2-1	450	0.1	3.9	15.7	1.28	1.58	0.029	4	0.05	4.73
T6L2-1	450	0.2	3.9	15.7	1.28	1.58	0.050	2	0.09	3.50
T6L2-1	225	0.2	3.9	15.7	0.64	0.79	0.026	2	0.04	1.81
T6L2-1	450	0.5	3.9	15.7	1.28	1.58	0.072	2	0.22	2.21
T6L2-1	225	0.5	3.9	15.7	0.64	0.79	0.050	2	0.11	1.55
T6L2-1	450	0.7	3.9	15.7	1.28	1.58	0.104	2	0.29	1.62
T6L2-1	225	0.7	3.9	15.7	0.64	0.79	0.079	2	0.14	1.90

Standard Stroke, Increments in inches					
Stoke	3.9"	7.9"	11.8"	15.7"	
a3	11.02"	14.96"	18.90"	22.83"	

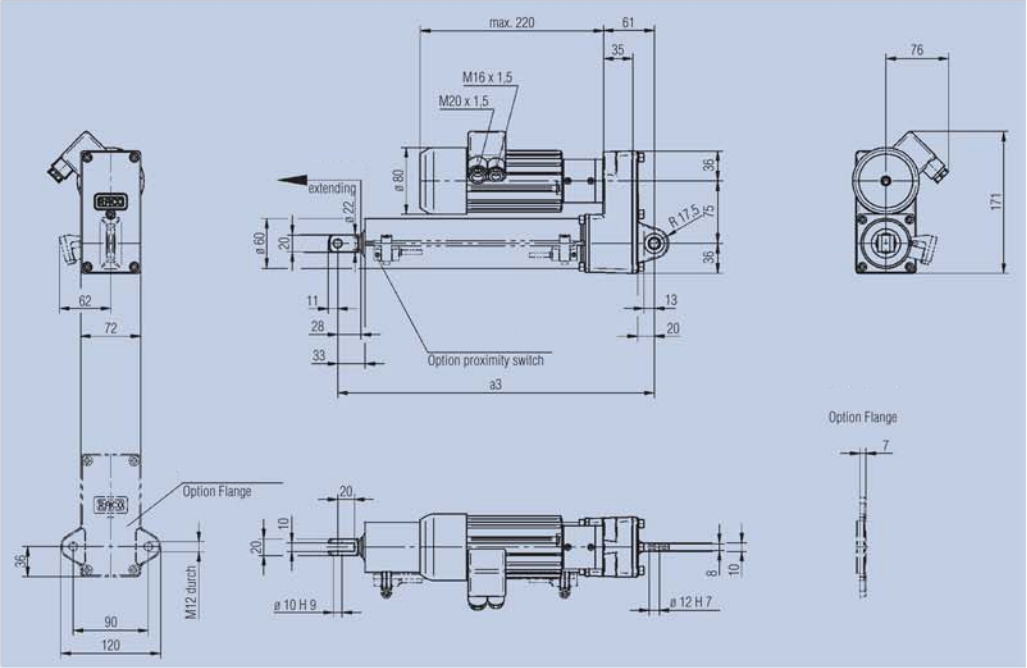

RACO International, L.P.
3350 Industrial Blvd., Bethel Park PA 15102, Tel: 412-835-5744, Fax: 412-835-0338, web: www.racointernational.com